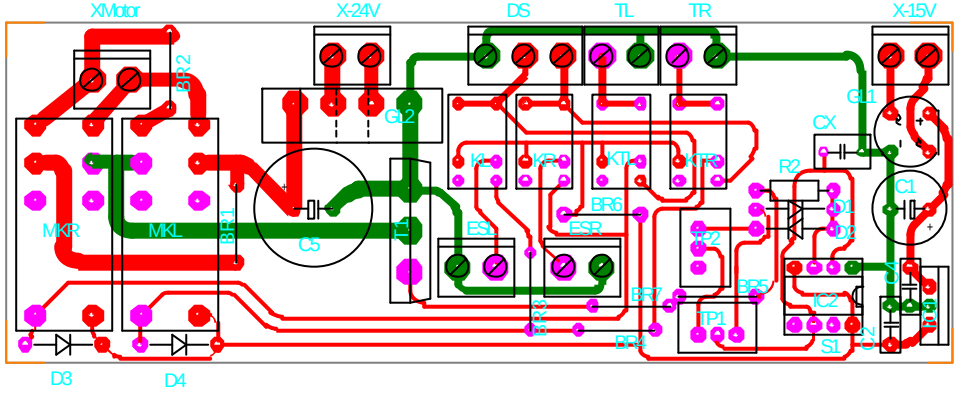
XMotor
X-24V
DS
TL
TR
X-15V
BR2
GL2
GL1
CX
KL
KR
KTL
KTR
R2
C1
D1
D2
BR6
ESL
ESR
TP2
MKR
MKL
BR1
C5
BR7
BR5
IC2
TP1
BR3
BR4
S1
D3
D4