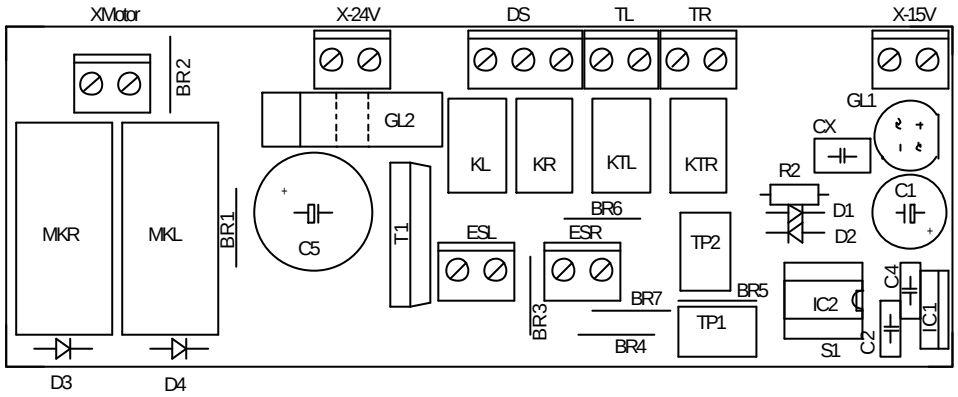
XMotor
X-24V
DS
TL
TR
X-15V
BR2
GL2
KL
KR
KTL
KTR
GL1
CX
R2
D1
D2
C1
MKR
MKL
BR1
C5
T1
ESL
ESR
BR6
TP2
BR3
BR7
BR5
TP1
BR4
IC2
S1
C4
C2
IC1
D3
D4